LD & TP WALL ANCHOR
WITH THERMASTOP® ISOLATION WASHER

APPLICATION

LD and TP wall anchors are used to attach a variety of KWS® girts, rails and brackets to many types of substrates.

Featuring a large, pancake head style with a 6-lobe drive, the fasteners drive quickly and smoothly. With the use of a double barrier coating enduring over 1,000 hours of salt spray for High Corrosion Resistance (HCR®), they're engineered to hold up to the harshest conditions.

TP #14 (Thread Point)

Gimlet Point for Wood Stud, Concrete and CMU Applications.

LD #14 (Light Duty)

Drill Point for Steel, Wood, Concrete & CMU Applications.

PRODUCT FEATURES

- Thermal break between fastener and girt.
- Case-hardened and tempered screw for easy installation and long-term durability.
- 6-lobe internal drive offers excellent bit engagement during installation, especially in high torque applications.
- Strong fastener for stronger connections.
- High corrosion resistance.

MATERIAL SPECIFICATIONS

SCREW MATERIAL	*Case-hardened & tempered ASTM A510 Carbon Steel*
SCREW COATING	*HCR® double barrier coating for high corrosion resistance*
WASHER MATERIAL	*SABIC LEXAN 143 Polycarbonate*

FASTENER PROPERTIES

FASTENER	ALLOWABLE TENSILE (LB) AISI S904	ALLOWABLE SHEAR (LB) AISI S904	BENDING YIELD STRENGTH FYB (KSI) ASTM F1575	CORRSION RESISTANCE ASTM B117
TP	*1,185*	*860*	*185*	*>1,000 hrs*
LD	*1,130*	*830*	*185*	*>1,000 hrs*

LD & TP WALL ANCHOR
WITH THERMASTOP® ISOLATION WASHER

PRODUCT SPECIFICATIONS

TP Wall Anchor

No. 14 fastener with pancake head and thread drill point.

LD Wall Anchor

No. 14 fastener with pancake head and two-flute drill tip.

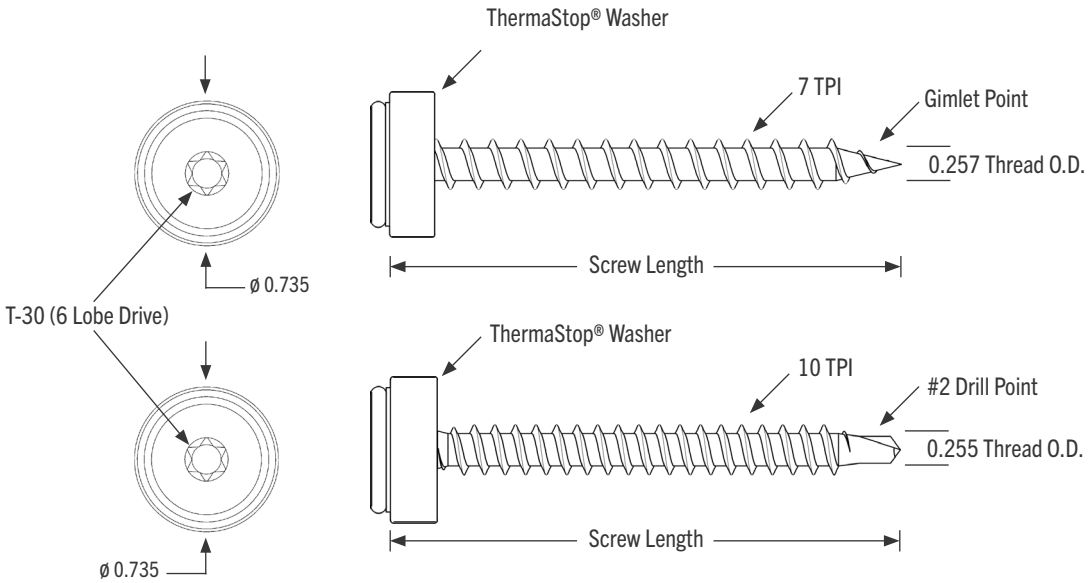

INSTALLATION GUIDELINES

LD & TP wall anchors are intended to mechanically attach KWS® girts, rails and brackets to various substrates.

- LD (Light Duty) screws are for installation into light gauge steel substrates (20-16 GA), wood, concrete or CMU. Install using a maximum 2,000 rpm screw gun.
- TP (Thread Point) screws are for installation into wood, concrete or CMU. Install using a low rpm/high torque screw gun.
- Lead holes are not required when installing into wood for both LD and TP screws.
- For installation into concrete or CMU, predrill with 3/16 in. masonry bit for both LD and TP screws.
- Do not use an impact driver and do not overdrive fasteners during installation.

CAUTION: These fasteners shall not be struck with a hammer during installation.

LD & TP WALL ANCHOR
WITH THERMASTOP® ISOLATION WASHER

DESIGN PROPERTIES

TENSION VALUES IN CONCRETE & CMU (LB)				
COMPRESSION STRENGTH	3000 PSI CONCRETE	5000 PSI CONCRETE	7000 PSI CONCRETE	CMU
TP	*699*	*859*	*1048*	*713*
LD	*471*	*648*	*783*	*553*

All values are ultimate with 1-inch embedment.

Fastener penetration is the threaded length embedded in the main member, including the tip.

TP/LD MINIMUM SPACING REQUIREMENTS (IN)	
MINIMUM SPACING	3
CRITICAL EDGE DISTANCE	*3*
MINIMUM EDGE DISTANCE	*2.5*

WITHDRAWL VALUES IN LUMBER AND ENGINEERED WOOD (LB/IN)					
WOOD TYPE (SPECIFIC GRAVITY)	SPF (0.42)	DF-L (0.50)	LVL FACE (0.50)	LVL EDGE (0.50)	LSL FACE (0.50)
TP	*615*	*702*	*556*	*495*	*711*
LD	*497*	*720*	*540*	*469*	*646*

All values are ultimate at 1-inch penetration into main member.

Fastener penetration is the threaded length embedded in the main member, including the tip.

WITHDRAWL VALUES IN ENGINEERED WOOD (LB)						
WOOD TYPE	OSB			PLYWOOD		
THICKNESS	1/2”	19/32”	23/32”	15/32”	19/32”	23/32”
TP	*244*	*324*	*626*	*333*	*529*	*681*
LD	*261*	*334*	*693*	*344*	*519*	*720*

All values are ultimate with penetration through full thickness of board by 3/4”.

TP/LD MINIMUM SPACING REQUIREMENTS (IN)	
EDGE DISTANCE LOAD IN ANY DIRECTION	*0.625”*
END DISTANCE LOAD PERPENDICULAR TO GRAIN	*2.625”*
SPACING BETWEEN FASTENERS IN A ROW - PERPENDICULAR TO GRAIN	*2.625”*
SPACING BETWEEN ROW OF FASTENERS - IN-LINE	*1.25”*

LD PULLOUT VALUES IN STEEL (LB)		
20 GAUGE	18 GAUGE	16 GAUGE
396	*606*	*961*

All values shown are ultimate.

Penetration is a minimum of three full threads past the steel.

5/8” minimum spacing and 3/8” minimum edge distance.

LD & TP WALL ANCHOR
WITH THERMASTOP® ISOLATION WASHER

DUPONT™ ARMORWALL™ APPLICATION

LD VALUES IN DUPONT™ ARMORWALL™ (LB)		
PULLOUT	*367*	All values shown are ultimate. Min. safety factor of 4 advised.
SHEAR	*529*	Min. penetration through full thickness of sheathing board by 3/4".

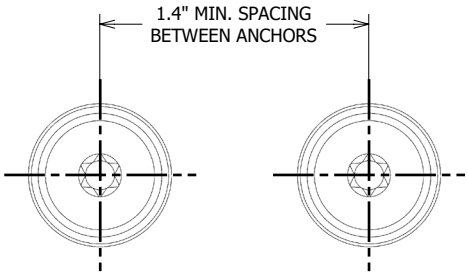

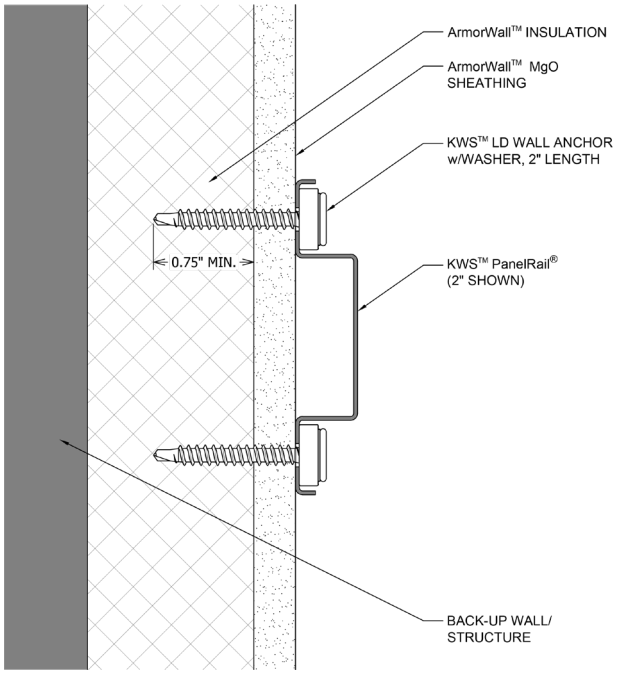

PRODUCT SELECTION

PART NUMBER	PART DESCRIPTION	MAXIMUM ASSEMBLY THICKNESS* (IN.)	BUCKET QUANTITY (EA.)	BUCKET WEIGHT (LB.)
133078	2.0" LD Screw with ThermaStop® Isolation Washer + HCR® Coating ^	*0.75"*	*250*	*7.5*
133079	2.5" LD Screw with ThermaStop® Isolation Washer + HCR® Coating	*1.25"*	*250*	*8.5*
133080	3.0" LD Screw with ThermaStop® Isolation Washer + HCR® Coating	*1.75"*	*250*	*9.5*
133081	2.0" TP Screw with ThermaStop® Isolation Washer + HCR® Coating	*0.625"*	*250*	*7.5*
133082	2.5" TP Screw with ThermaStop® Isolation Washer + HCR® Coating	*1.00"*	*250*	*8.5*
133083	3.0" TP Screw with ThermaStop® Isolation Washer + HCR® Coating	*1.50"*	*250*	*10*
133084	3.5" TP Screw with ThermaStop® Isolation Washer + HCR® Coating	*2.00"*	*250*	*11*

* Assembly thickness = sheathing thickness + thermal isolation thickness. ThermaBracket® isolation thickness = 3/8" ThermaZee® isolation thickness = 1/4"

^ Only the 2.0" LD screw is approved for use with Dupont ArmorWall.

NO EXPRESS WARRANTIES ARE GIVEN EXCEPT FOR ANY APPLICABLE WRITTEN WARRANTIES SPECIFICALLY PROVIDED BY KNIGHT WALL SYSTEMS®. ALL IMPLIED WARRANTIES INCLUDING THOSE OF MERCHANTABILITY AND FITNESS FOR A PARTICULAR PURPOSE ARE EXPRESSLY EXCLUDED. No freedom from any patent owned by KNIGHT WALL SYSTEMS® or others is to be inferred. Because use conditions and applicable laws may differ from one location to another and may change with time, Customer is responsible for determining whether products and the information in this document are appropriate for Customer's use. They are not guaranteed in any way by the Knight Wall Systems, Inc. since building design, engineering, and construction, including workmanship and materials are beyond the control of the manufacturer. The information provided here is subject to change without notice.

All content included on this document is and shall continue to be the property of Knight Wall Systems, Inc. or its content suppliers, and is protected under applicable copyright, trademark, and other proprietary rights. KNIGHT WALL SYSTEMS, the Knight Wall Systems design mark, KWS, ANKIT, CI, CI-Girt, FORMED TO PROTECT WHAT MATTERS MOST, INSULKEY, MFI, MOVEKLIP, PANELRAIL, TERMGIRT, THERMABRACKET, THERMASTOP, and THERMAZEE are registered trademarks controlled by Knight Wall Systems, Inc. Patent information: knightwallsystems.com/patents. This list is not exhaustive and Knight Wall Systems does not waive its rights in regard to other patents or trademarks that are not listed.
© 2026 Knight Wall Systems, Inc. All rights reserved. 10262026